ASSEMBLING INSTRUCTIONS - VANITY CABINET

MID BEAM
SIDE PANEL
BACK PANEL
FACE FRAME
DRAWER FRONT (FAKE)
DRAWER BACK
DRAWER SIDE
SIDE PANEL
BOTTOM PANEL
TOE KICK
DOOR FRONT
DRAWER BOTTOM
DRAWER FRONT

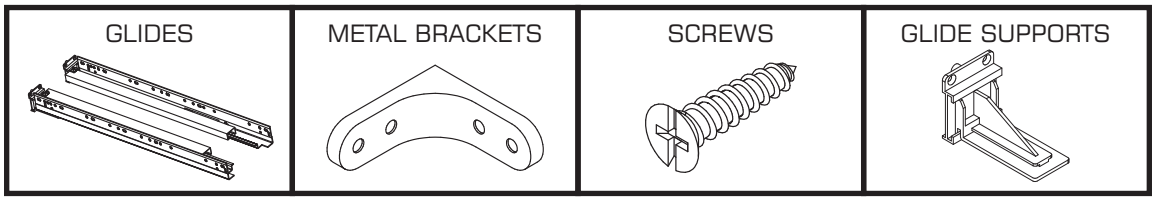

STEP 1

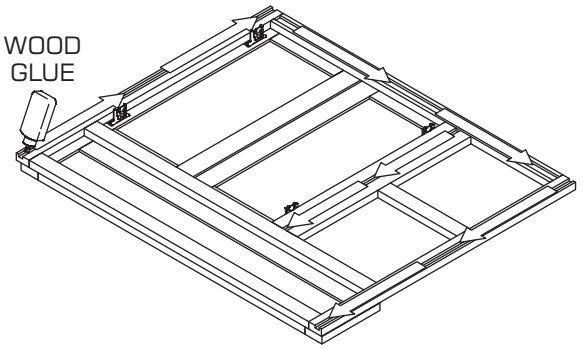

STEP 2

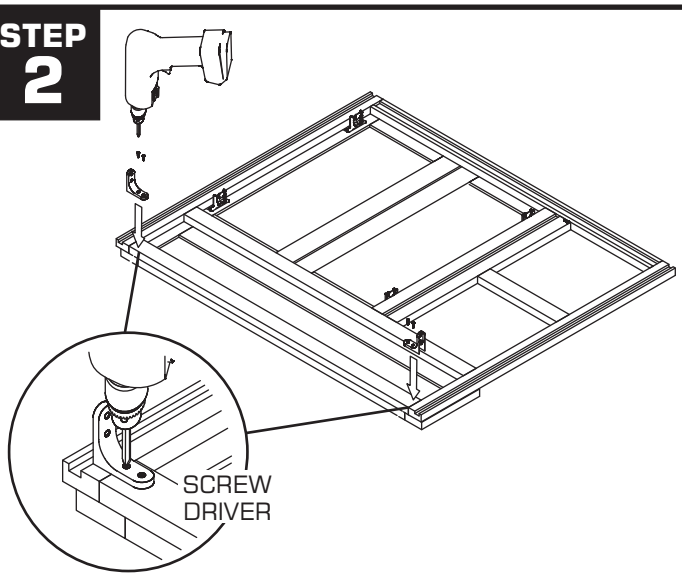

STEP 3

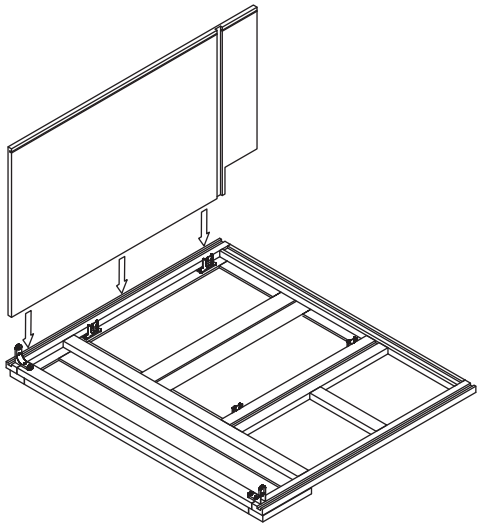

STEP 4

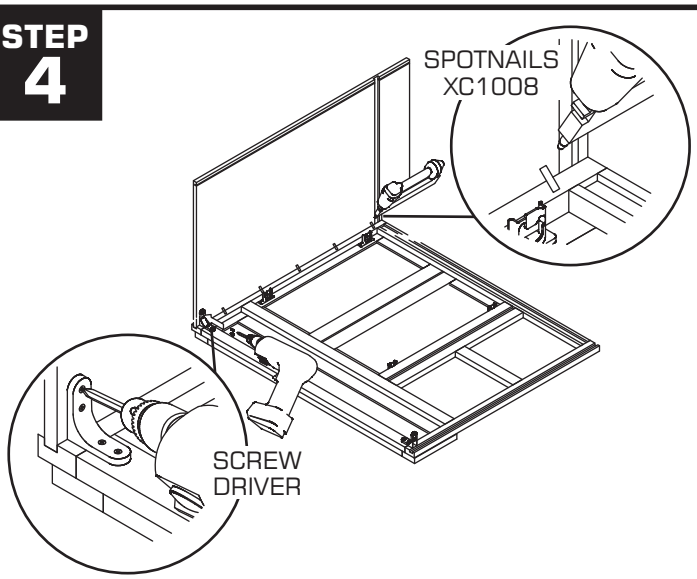

STEP 5

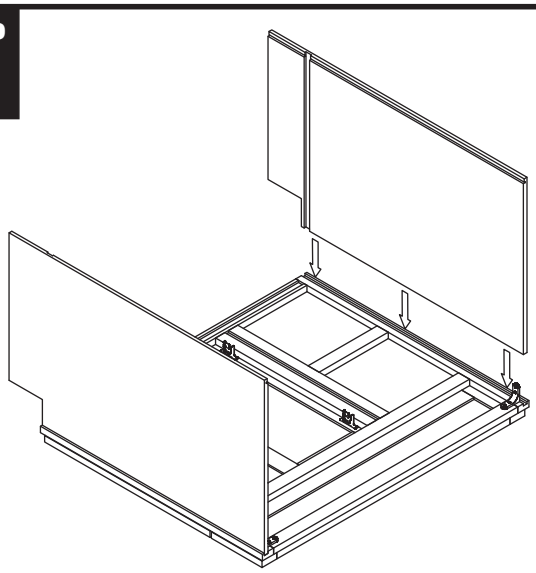

STEP 6

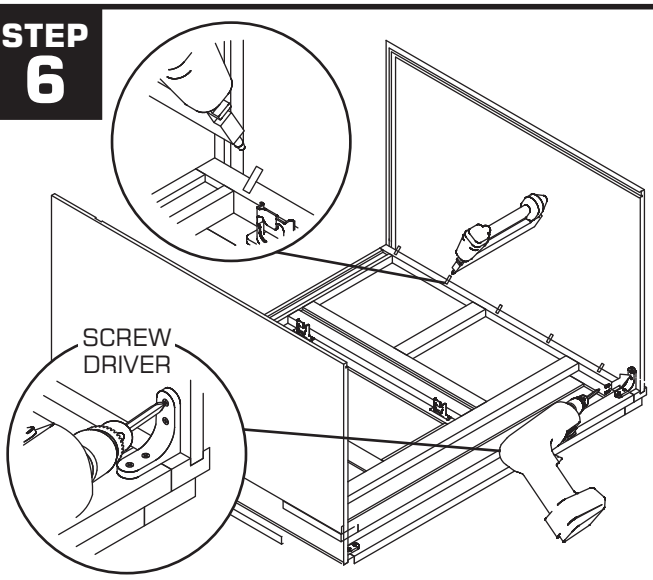

STEP 7

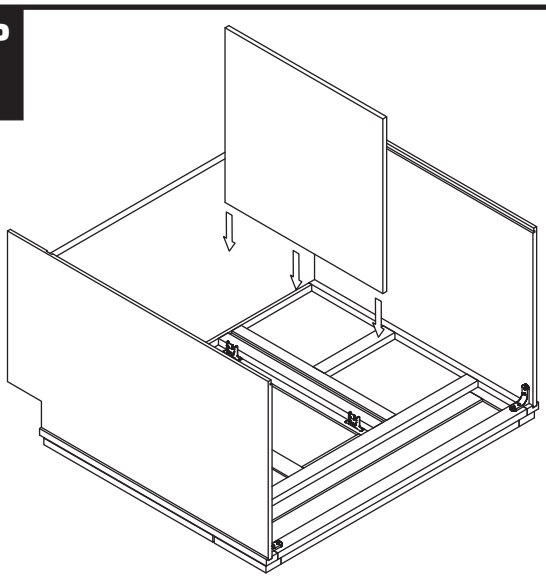

STEP 8

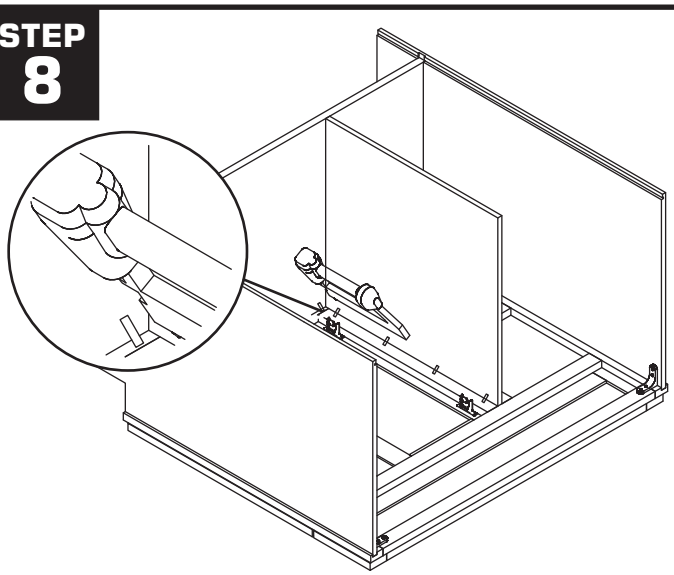

STEP 9

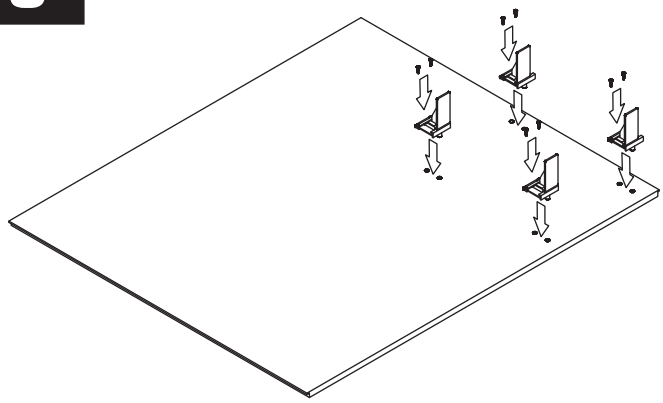

STEP 10

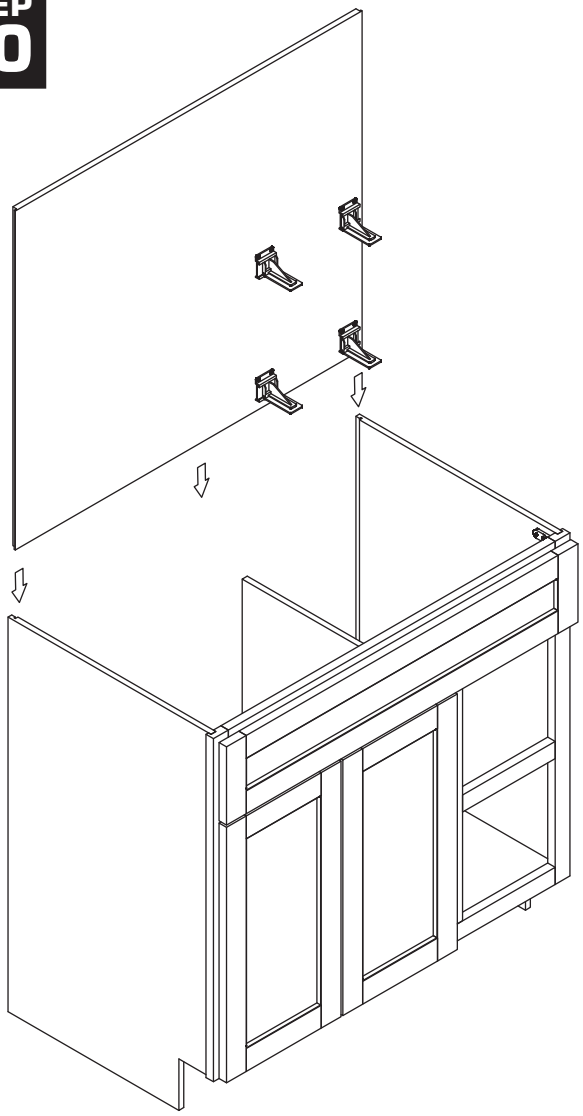

STEP 11

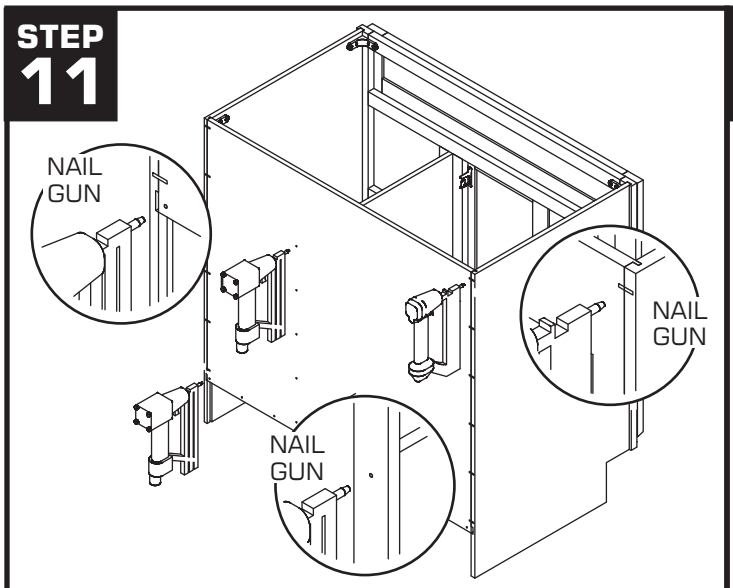

STEP 12

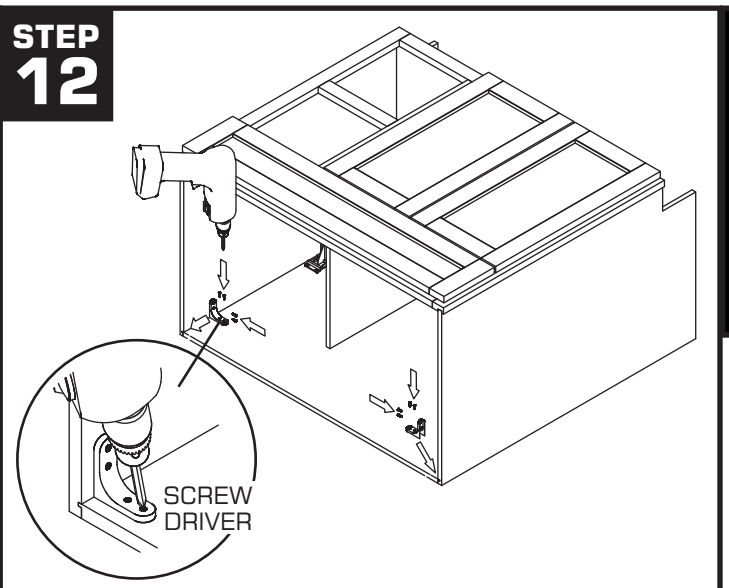

STEP 13

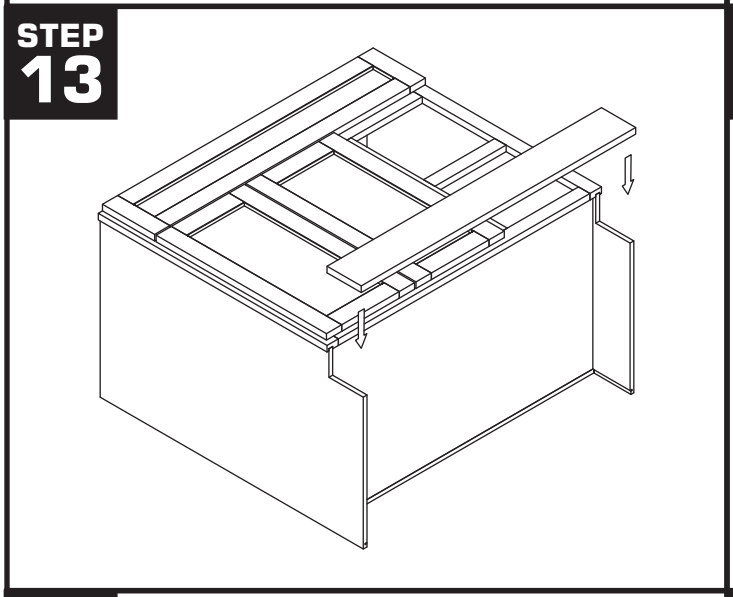

STEP 14

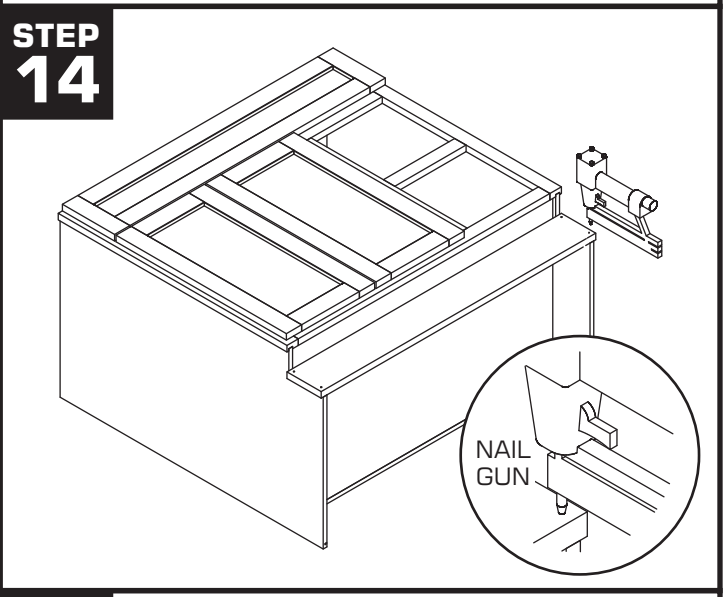

STEP 15

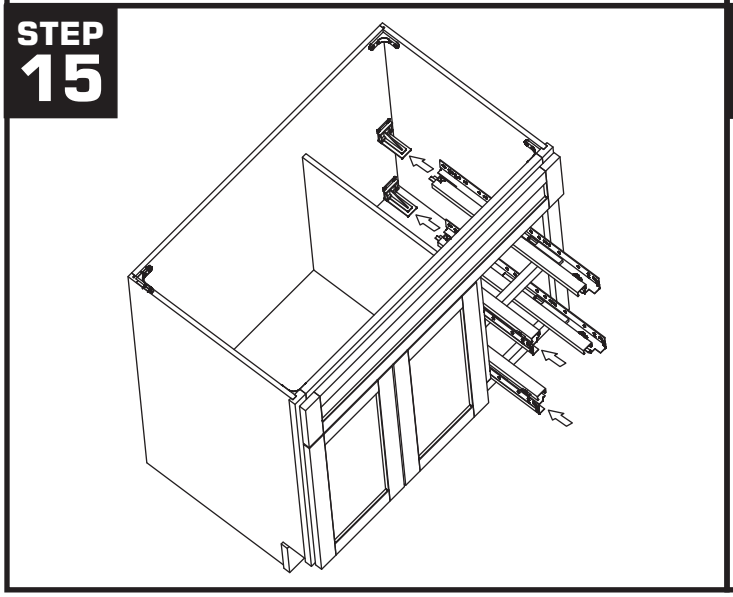

STEP 16

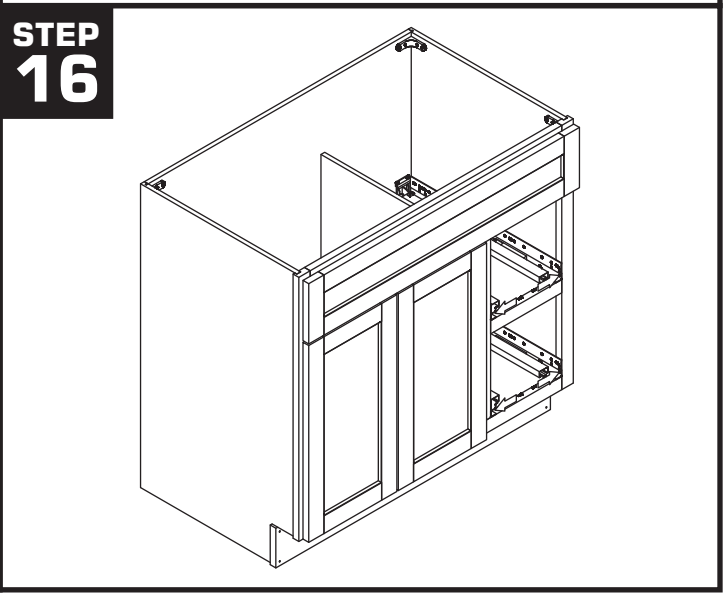

STEP 17

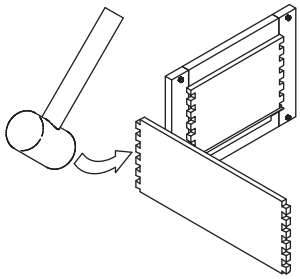

STEP 18

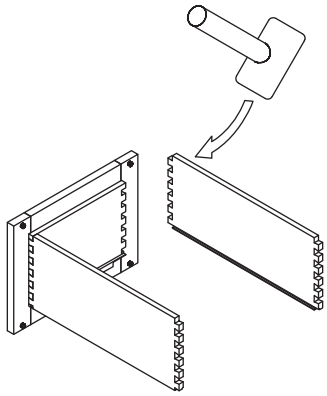

STEP 19

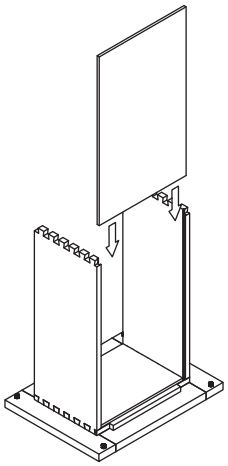

STEP 20

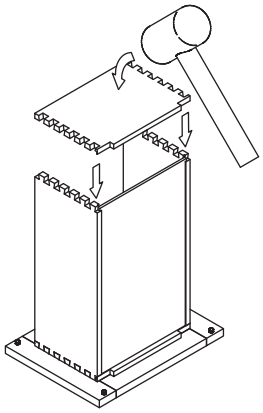

STEP 21

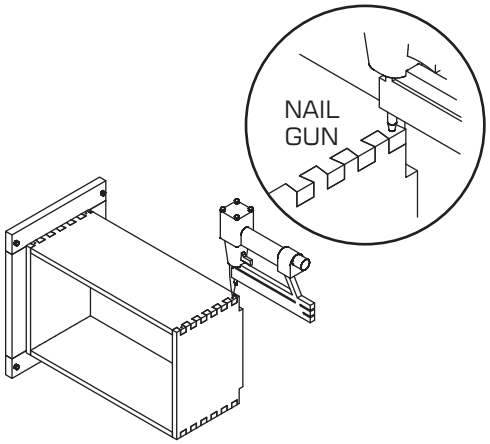

STEP 22

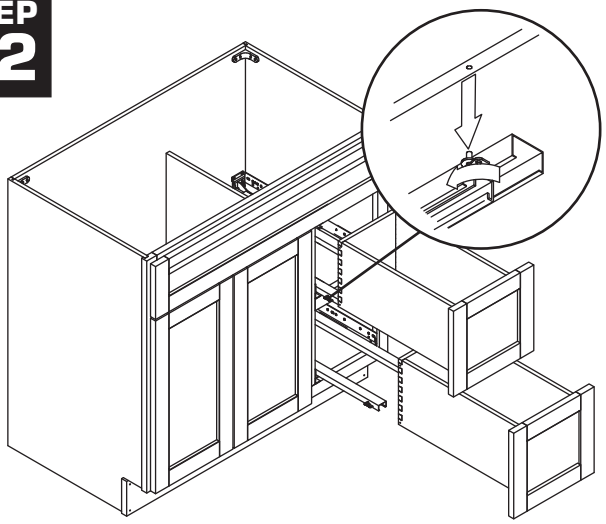

STEP 23

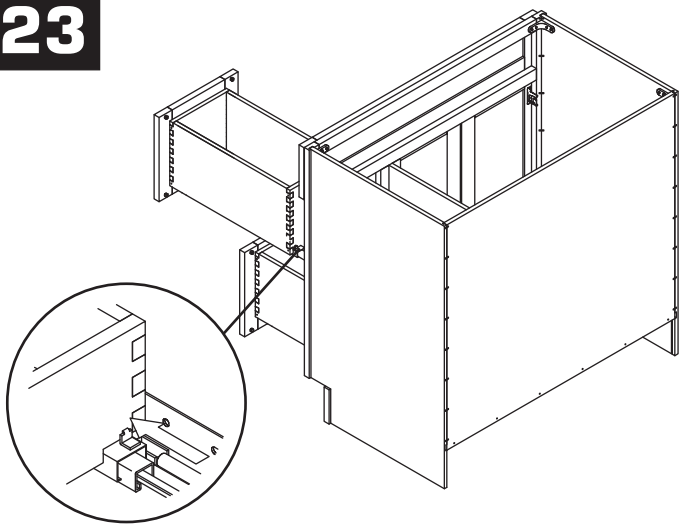
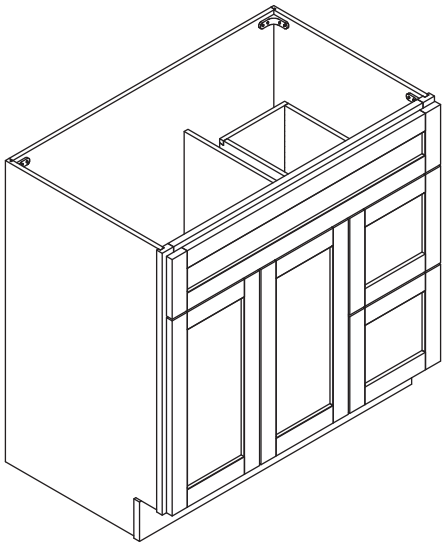
STEP 24