Hinges

DOMAIN CABINETS
Premium Ready-to-Assemble Cabinets

Our premium bamboo cabinets use Blum®'s most advanced and up-to-sate hardware for your hassel free installation and lifetime peace of mind.

Hinge-to-Door Attachment

Tool-free attachment with INSERTA expanding Ø**8** mm dowels

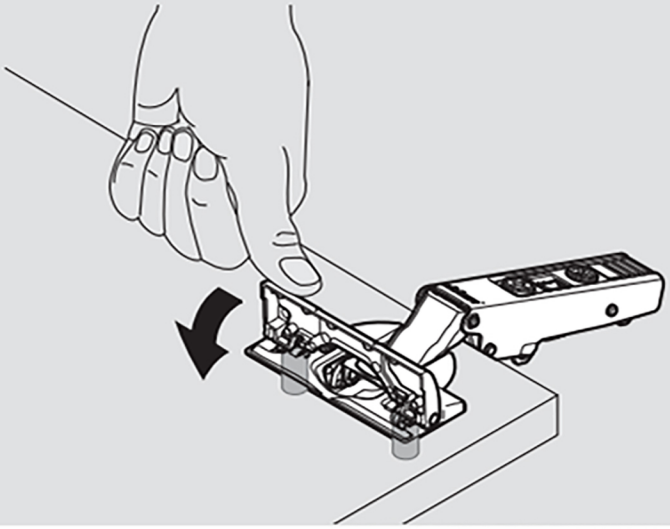

Mounting Plate-to-Cabinet

Tool-free attachment with INSERTA expanding Ø**5** mm dowels

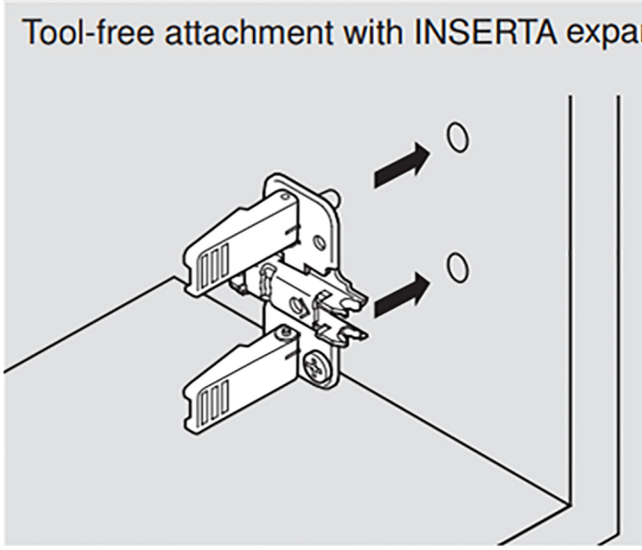

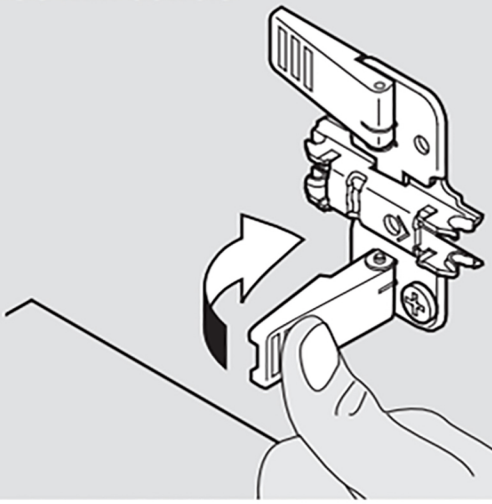

Blum three-point contact

CLIP top BLUMOTION, CLIP top and CLIP hinges have three-point contact between the hinge and mounting plate to keep them firmly connected under heavy usage.

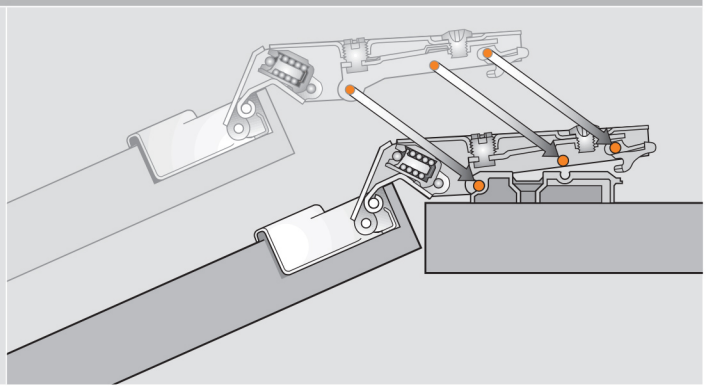

Side adjustment

Blum's side adjustment is a flush screw head that allows **4** mm of adjustment. It also has an integral stop that prevents removal.

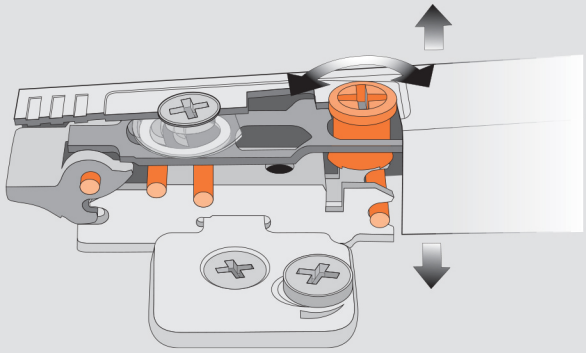

Spiral tech depth adjustment

With Blum's spiral tech depth adjustment just one and three quarter revolutions of the screw creates **5** mm of adjustment without loosening and retightening a fixing screw.

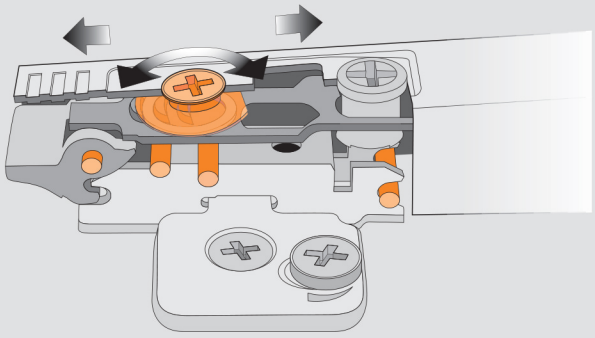

INSERTA mounting plates

Blum's newest INSERTA mounting plates come with expanding Ø5 mm dowels that fit Remington Cabinet's system holes, and offer a complete tool-free attachment.

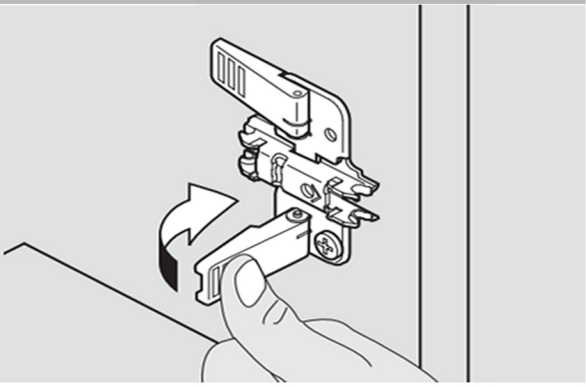

 © 2017 Blum, Inc.

Three-Dimensional Adjustment

Side adjustment

Rotate front screw to increase or decrease door overlay (±**2** mm)

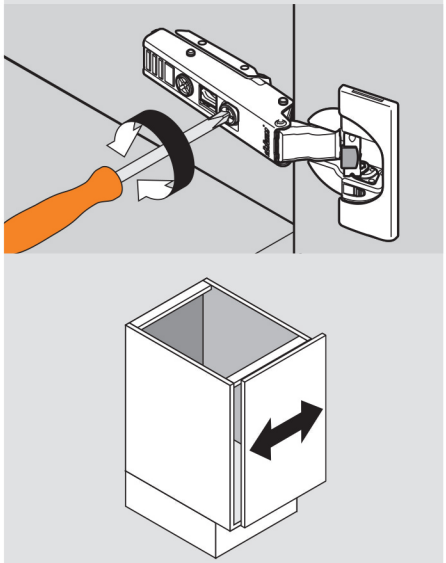

Height adjustment

Rotate cam screw on mounting plate to adjust door position (±**2** mm)

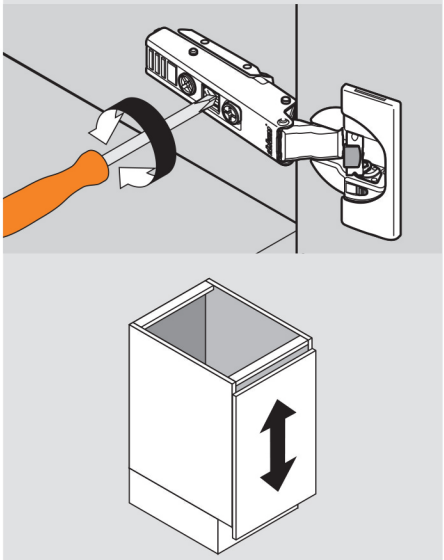

NOTE: On non-cam mounting plates, loosen screws, adjust door and retighten screws

Depth adjustment

Rotate rear spiral tech cam screw to adjust door gap (+**3** mm, -**2** mm)

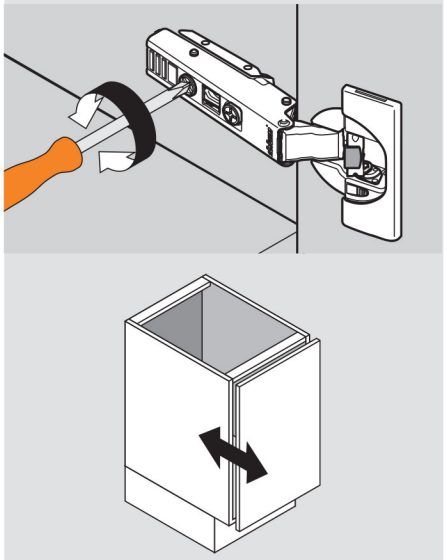

BLUMOTION Deactivation

Deactivation switch on hinge cup

For small or light doors, the BLUMOTION can be deactivated on one of the hinges

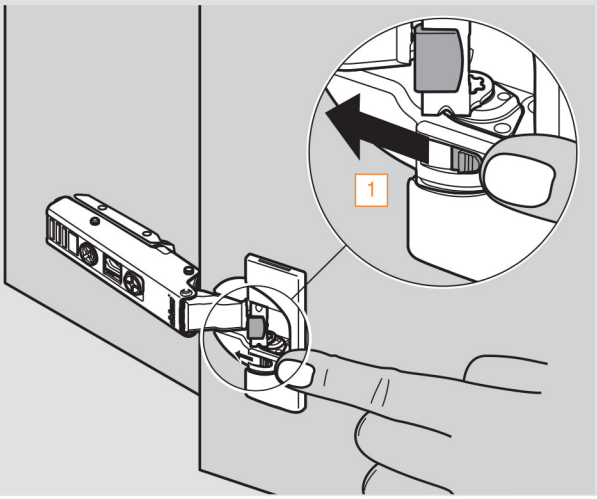

Door must be closed once for the deactivation to be complete.
To reactivate, move switch back to original position.

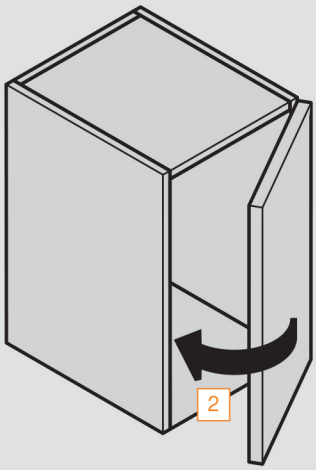

Temperature information

CLIP top BLUMOTION is designed to be used at temperatures between 65° and 85°F. Lower or higher temperatures will not cause damage to the hinge, however they will affect the closing speed. Once the temperature returns to the suggested range the hinge will return to its optimal closing action.

 © 2017 Blum, Inc.

CLIP top BLUMOTION 110°

Features

- BLUMOTION integrated into the hinge cup
- Deactivation switch for small/light doors
- For door thicknesses up to **26** (1")
- Overload safety feature
- 86° angle restriction clip available (70T3553)
- Compatible with existing CLIP mounting plates and hinge arm cover caps

Minimum reveal table					
3	**0.5**	**1.0**	**1.8**	**2.7**	**4.3**
4	**0.5**	**1.0**	**1.7**	**2.5**	**3.8**
5	**0.5**	**0.9**	**1.7**	**2.4**	**3.4**
6	**0.5**	**0.9**	**1.6**	**2.3**	**3.2**
7	**0.5**	**0.9**	**1.6**	**2.2**	**3.0**
B = boring distance	**16**	**19**	**22**	**24**	**26**
	T = door thickness				

Panel

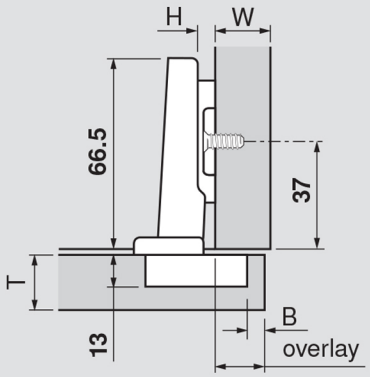

H	Overlay					P	S
0	**14**	**15**	**16**	**17**	**18**	**12**	**21.5**
	3	**4**	**5**	**6**	**7**	Fixed distance = **11**	
	B = boring distance						

NOTE: **4.5** plate is only for use in frame cabinets, **9** plate is only for panel cabinets

Straight-arm	Self close
INSERTA	**71B3590**

CLIP Mounting Plates

Hinges

Cam adjustable wing mounting plates

INSERTA

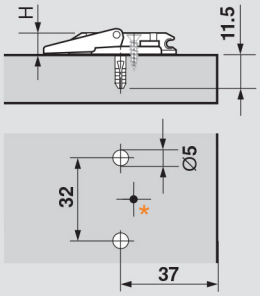

- Steel (closing lever – zinc die-cast, nickel-plated)
- Tool-free assembly with INSERTA self-anchoring feature
- Cam height adjustment ±**2** mm

	Part no.
0 plate height (H)	**174H7100I**

 © 2017 Blum. Inc.

Conditions for Tests

Blum, Inc. does a great deal of testing to ensure that the quality of our hardware is consistent with the usual high standards that our customers have come to expect from Blum. For this reason we have rigorous testing procedures which are carried out from the development stage through production. Blum's internal testing standards are based on practical applications of our products and are more stringent than what is required by ANSI/BHMA.

NOTE: All Blum hinges meet or exceed ANSI/BHMA A156.9-2001 grade 2 requirements. All concealed hinges are designed for indoor use.

Cycle test	
Specifications	▬ Door size – 23-5/8" height, 23-5/8" width, 3/4" thickness ▬ Door weight –14.3 lb for cycle tests ▬ Door weight – 18.5 lb for load and over push tests ▬ Boring distance – **5** mm
Distance between hinges	▬ 16-15/16"
Hinge and mounting plate attachment	▬ Hinges are mounted to test blocks and attached to test door and stand with clamps ▬ Test blocks for door: Particle board ▬ Test blocks for mounting plate: Particle board

Cycle test

Without load

▬ 200,000 opening and closing cycles for all CLIP hinges

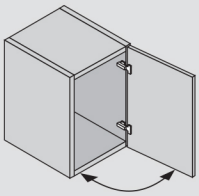

Positive test result

With load

▬ 11 lb extra weight is applied for 100,000 opening and closing cycles

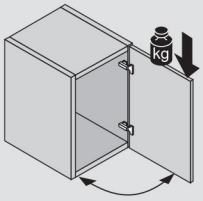

Positive test result

Load test

Static load

▬ 67 lb applied ten times for five seconds, each at 45° opening angle

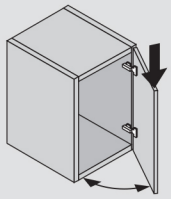

Positive test result

Dynamic load

▬ 44 lb extra weight applied for fifty opening and closing cycles

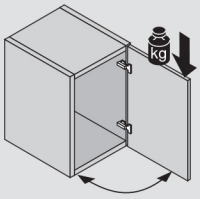

Positive test result

Over push test

Without load

▬ CLIP hinges – Increasing forces up to 11 lb applied for a total of five times for a total of five seconds each

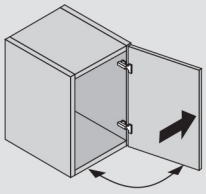

Positive test result

 © 2017 Blum, Inc.